savyonDIAGNOSTICS
member of the Gamida Diagnostics Division

savvy•gen

Respiratory Extraction Kit

REF 653-01; 48 extractions
654-01; 96 extractions

Store at 15°C - 35°C

For use with the Nextractor® Instrument

For Professional Use Only CE IVD

Savyon® Diagnostics Ltd.
3 Habosem St. Ashdod 7761003
ISRAEL
Tel.: +(972).8.8562920
Fax: +(972).8.8523176
E-mail: support@savyondiagnostics.com

EC REP
European Authorized Representative:
Boulevard Général Wahis 53
1030 Brussels, BELGIUM
Tel: +(32) 2. 732.59.54
Fax: +(32) 2.732.60.03
E-Mail : mail@obelis.net

Table of Contents

Table of Contents

Introduction **3**

Intended Use 3

Principle of Procedure 3

Materials & Equipment **4**

Materials Materials/ Reagents Provided 4

Additional Equipment and Material Required 4

Kit Validity 4

Warnings & Precautions **4**

Experimental Process **5**

Experimental Methods 5

Sample collection & Storage 5

Test procedure 5

Troubleshooting **7**

INTRODUCTION

Intended Use

The Savvygen™ Respiratory Extraction Kit is an automatic extraction system for the isolation of high quality DNA/RNA from Nasal Swab, UTM. This extraction kit is designed to use with Nextractor® to provide high-yield and quality DNA/RNA from samples.

For *in-vitro* professional diagnostic use.

Principle and procedure

The Savvygen™ Nucleic Acid Extraction technology is based on magnetic beads isolating of nucleic acid (NA) from Biological samples. The basic of this method is the use of Silica beads, capable of binding the NA in the presence of a chaotropic agent. This method is simple, rapid, and reliable method for the small-scale purification of NA from Biological sample.

The Savvygen™ Extraction kit is designed to use with Nextractor® system which offers fully automated extraction of up to 48 specimens at single and within 16 minutes.

The Savvygen™ Extraction kit procedure is performed in the following steps*:*

1) The specimens are placed into the sample well plate which contains in each well all the necessary reagents for the assay.

2) The well plate is placed on the loader tray of the Nextractor® system.

3) The user choose the desired protocol and start the program.

The extraction process for isolating nucleic acid from starting material by magnetic beads consist of the following 3 steps (Figure 1):

The first step of the extraction includes Lysis of the specimen in the presence of large amount of chaotropic substance and Binding of releasing-Nucleic Acid d to silica beads (magnetic bead).

The second step of extraction is washing silica beads. In this step, silica beads are washed in washing solution several times to remove contaminants such as PCR inhibitors.

The third step of extraction is DNA Elution. In this step, bonded nucleic acids is separated from the silica beads. Pure NA are eluted into buffer by decreasing the concentration of chaotropic substance

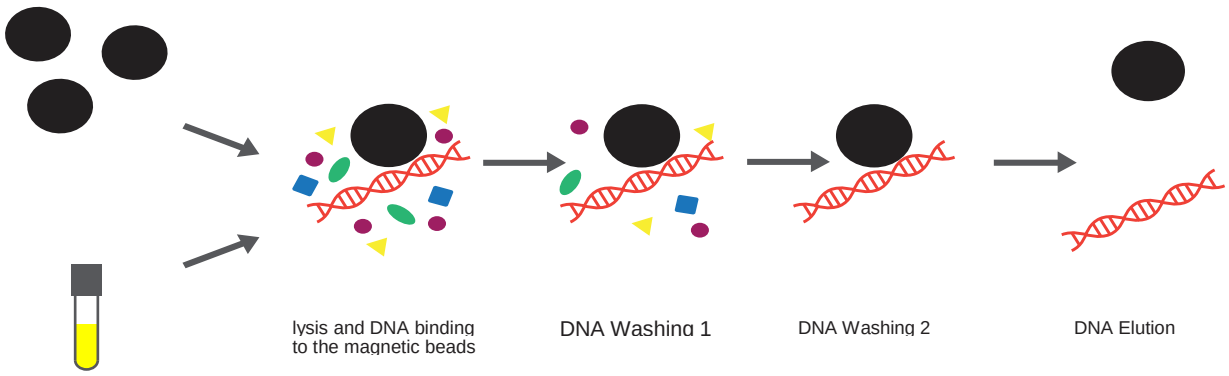

Figure 1: DNA extraction process using silica magnetic bead

MATERIALS & EQUIPMENT

Materials/ Reagents Provided

Product Description	Contents	Specimen type
Savvygen™ Respiratory Extraction Kit Cat.# 653-01; 48 extractions	Extraction Plate (Respiratory) (32 well x 6 plates)	Nasal swab, UTM
	Rods Plastic Strip x 6 units	
Savvygen™ Respiratory Extraction Kit Cat.# 654-01; 96 extractions	Extraction Plate (Respiratory) (96 well x 4 plates)	
	Rods Plastic Strip x 12 units	

Additional Equipment and Material Required

- Disposable powder-free gloves
- Appropriate volume pipettes
- Sterilized, filtered pipette tips
- Vortex mixer
- Tabletop centrifuge
- Nextractor® (NX-48, Genolution Inc. KOREA). Distributed by Savyon Diagnostics Ltd. Please refer to the instrument manual for more details.

Kit Validity

This kit is valid for 12 months when stored at 15-35°C.

WARNINGS & PRECAUTIONS

- All samples must be treated as potential biohazards. Wear appropriate protective eyewear, clothing, and gloves.
- Avoid direct skin contact with kit reagents. In case of contact, wash immediately and thoroughly with water.
- Minimize the inhalation of chemicals. Do not leave chemical containers open.
- All work should be conducted in properly equipped facilities for safety reason (i.e. physical containment devices).
- Individuals should be trained according to the relevant regulation and requirements of the company/institutions prior to working with potentially infectious materials.

The reagent well plates contain Ethanol and Chaotropic Salt. These substances should be considered flammable, harmful and irritants. The Savvygen™ Respiratory Extraction Kit and reagent well plates are designed to be used with potentially infectious substances. Users should wear appropriate personal protective equipments (e.g. gloves and lab coat) when handling infectious substances.

Extraction Plate (Respiratory DNA/RNA)

	Harmful – may cause sensitization skin contact. Avoid contact with skin, wear suitable gloves. Harmful to aquatic organizations may cause long-term adverse effects in the aquatic environments. **Contains:** Chaotropic Salt
	Highly flammable– keep away from any source of ignition, no smoking **Contains**: Ethanol

EXPERIMENTAL PROCESS

Experimental Methods

- The Savvygen™ Respiratory Extraction Kit should be used with Nextractor® system.
- All extractions should be processed in temperature between 15-35°C.
- Our extraction kit should be kept in the temperature between 15-35°C. Otherwise the result might be affected.

Sample collection & Storage

Sample collection:

The Savvygen™ Respiratory Extraction Kit is optimized for DNA extraction from various clinical samples as specified in the intended use. DNA/RNA should be isolated from clinical sample within one day after collection.

Sample storage:

The clinical samples are suggested to be stored for 1 day at 2-8°C. For longer storage, the clinical samples should be kept at -20°C.

Test Procedure

1. Determine the number of samples to be tested and carefully remove the sealing film of the Respiratory Extraction Kit.
2. Invert the tested samples gently several times to mix and transfer 200µ of each samples into the sample wells (in a 96 wells plate: apply samples to the 1st, 5th, and 9th columns; in a 32 wells plate: apply samples to the 1st column) of the extraction plate (figure 2).

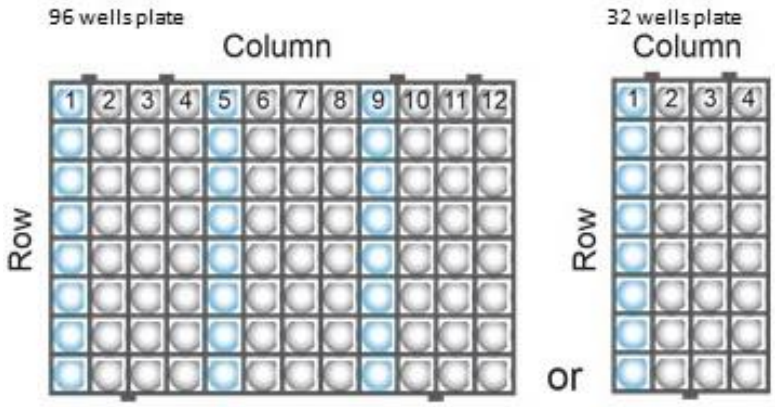

Figure 2: Samples wells (marked in blue) in respect to the Plate type

3. Open the front glass door of the instrument and pull out the plate loader.
4. Insert Rods Plastic Strip in the Strip Holder in accordance to the tested samples plate and push it to the end (figure 3).

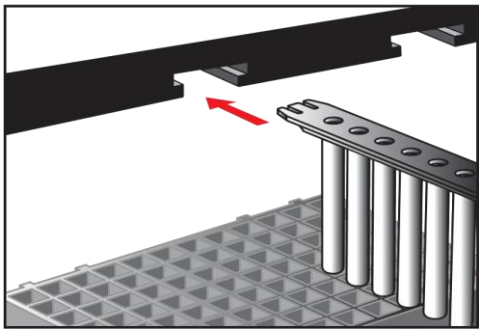

Figure 3: Inserting the rods plastic strip to its position

5. Place the extraction plate on the Plate Loader. Note that the plastic caviti into their positions (Figure 4).

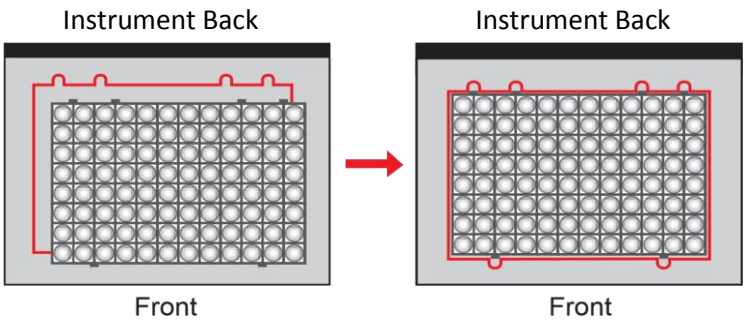

Figure 4: Positioning of the 96 well plats on the plate loader

6. Push the Plate Loader in until you hear a clicking sound and pull down the door to close.
7. Press Run > [v] > 'Protocol No. 1' protocol for extraction (Figure 9)

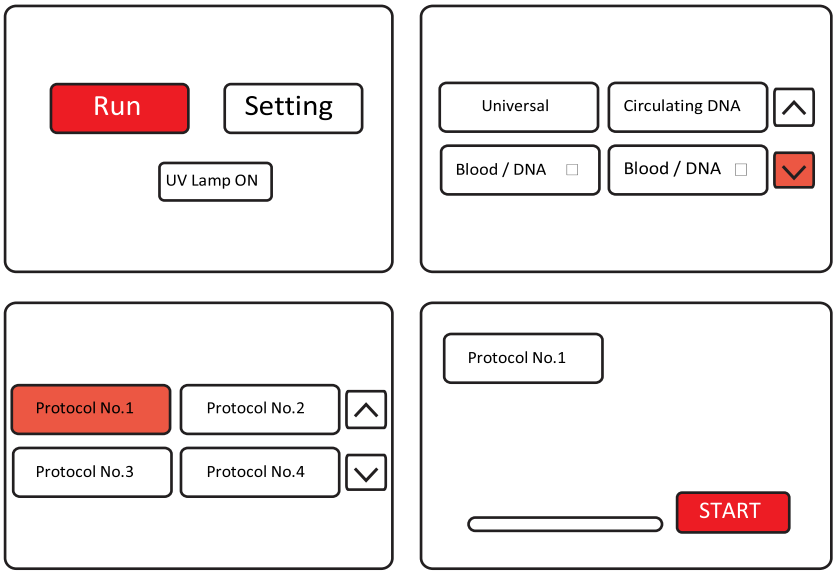

Figure 5: Protocol setting screens

Attention: When the Nextractor starts the extraction procedure, it should move the magnetic beads into the wells in the 1st column and mix them with the samples.

TROUBLESHOOTING

Symptoms	Causes	Solution
When running the extraction protocol the beads are not mixed with the sample in the 1st column	Problem with the instrument calibration position	It is recommended to stop the run. Take out the sample plates of the instrument and to turn off the instrument power. Then turn on the instrument and start again the run protocol. If the problem reoccur, please refer to the instrument manual for the instrument calibration
Considerable loss of elution buffer or no solution found in the well when extraction completed	Loss of magnetic beads and elution buffer due to excessive gDNA from specimen	It is recommended to reduce the volume of the specimen for extraction and return the run in a new plate
		In case of no progress despite reduction of the specimen, try following steps: 1) Extract using 'Blood/DNA II' protocol in the Nextractor protocol menu. 2) Put magnetic bead and elution buffer into 1.5 ml tube. 3) Heat the tube at 60°C for 10min. 4) Centrifuge for 30 sec. at 13,000 rpm and use upper supernatant in the tube when finished (if centrifuge is not available, place the well plate on the magnetic stand wait for a minute and use upper supernatant in the tube.)
Excessive magnetic beads found in Elution well	Including impure material in the specimen	Place the well plate on separated magnetic plate, and use supernatant in the elution well when finished.

For more information, please contact Savyon Diagnostics directly or your Distributor.

www.savyondx.com. E-mail: info@Savyondx.com

Explanation of Symbols

Symbols	Explanation	Symbols	Explanation
	Do not re-use		Please refer to the manual
LOT	Lot Number		Expiration Date
IVD	In-vitro Diagnostics product		Manufacturer details
REF	Catalog number	Σ	Package contains sufficient for < n > tests